THE INFORMATION CONTAINED IN THIS DRAWING IS THE SOLE PROPERTY OF BGW SYSTEMS, INC. ANY REPRODUCTION IN PART OR WHOLE WITHOUT THE WRITTEN PERMISSION OF BGW SYSTEMS, INC. IS PROHIBITED.

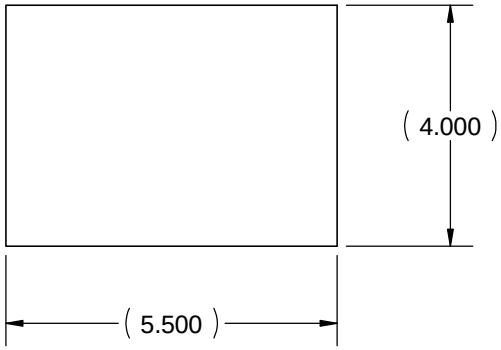

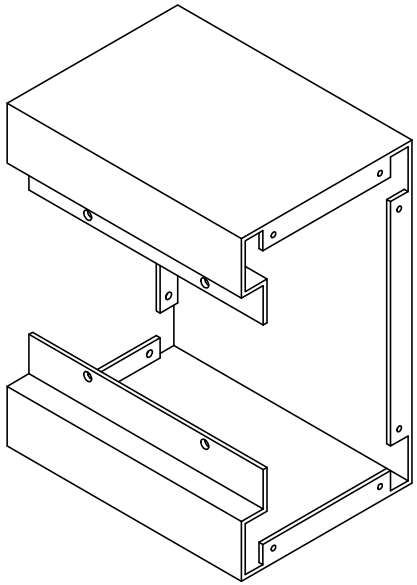

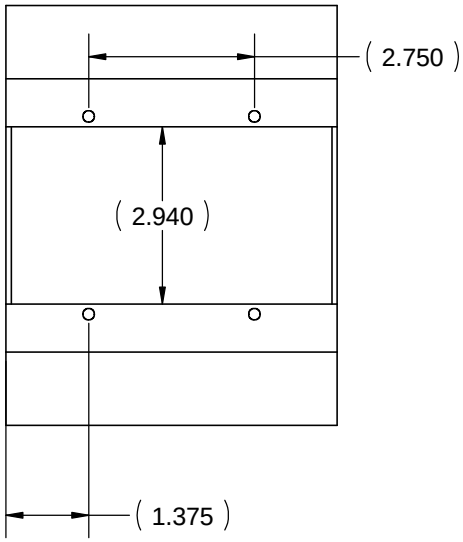

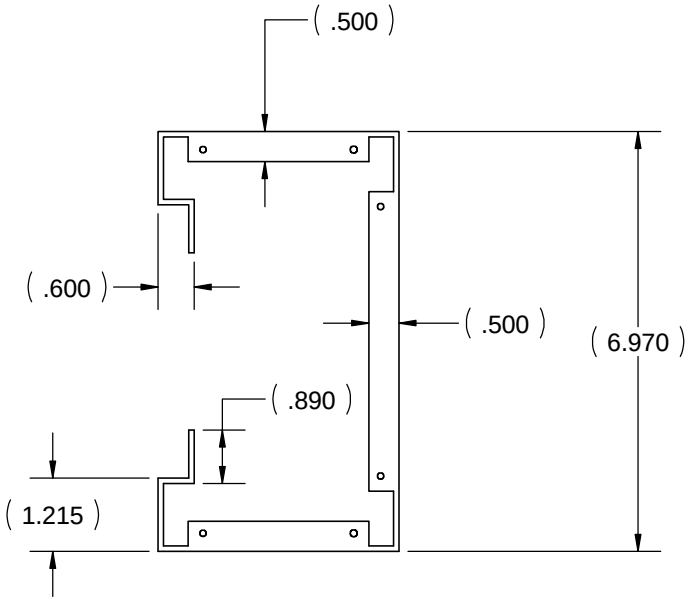

UNLESS OTHERWISE SPECIFIED DIMENSIONS ARE IN INCHES
TOLERANCES ARE:
FRACTIONS + DECIMALS .XX+ .XXX+.XXX ANGLES .XX + 1

MATERIAL 0.090" Aluminum

FINISH Texture Powder Flat Black

DO NOT SCALE DRAWING

CAD GENERATED DRAWING, DO NOT MANUALLY UPDATE

APPROVALS	DATE
DRAWN FM	1/29/01
CHECKED	
RESP ENG	
MFG ENG	
QUAL ENG	

BGW Systems, INC.
13130 Yukon Ave
Hawthorne, CA 90250

Modular Stage Box Shell
For 2 Plates

SIZE A | DWG. NO. 2SGSB | REV.

SCALE | CAD FILE: | SHEET | OF