THE INFORMATION CONTAINED IN THIS DRAWING IS THE SOLE PROPERTY OF BGW SYSTEMS, INC. ANY REPRODUCTION IN PART OR WHOLE WITHOUT THE WRITTEN PERMISSION OF BGW SYSTEMS, INC. IS PROHIBITED.

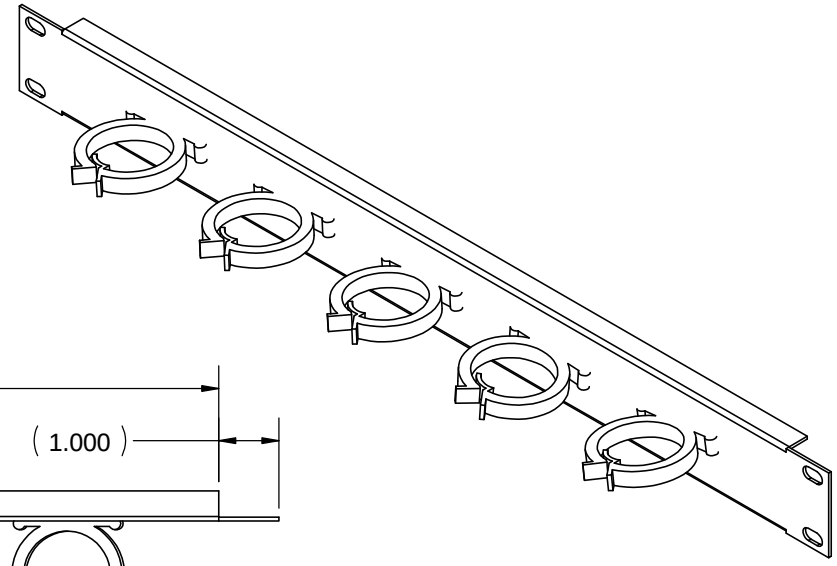

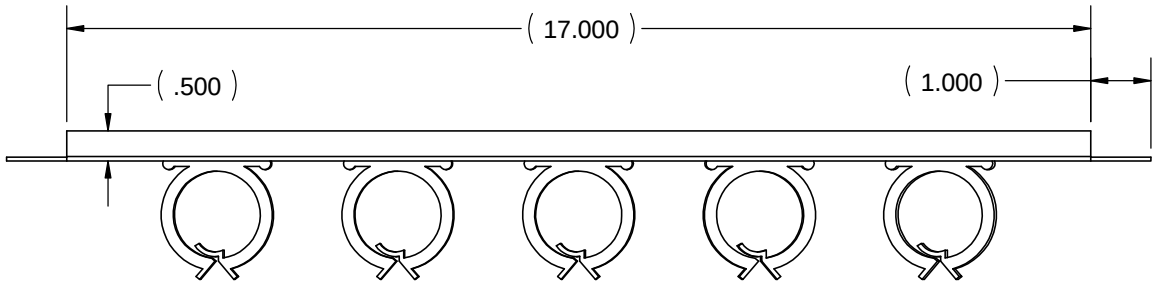

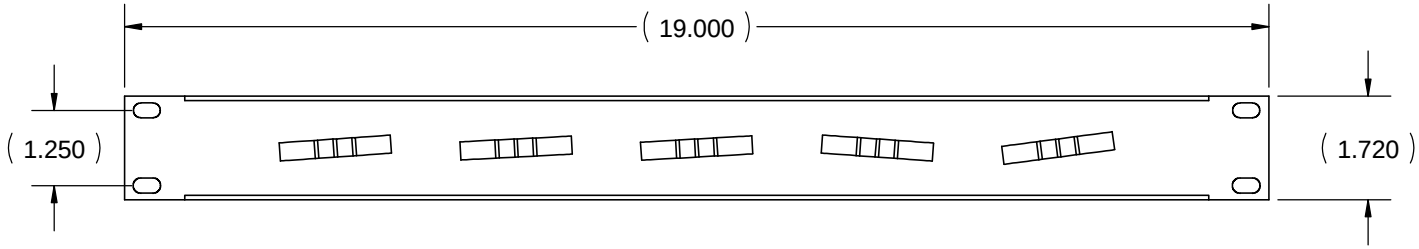

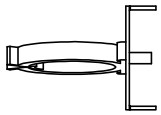

UNLESS OTHERWISE SPECIFIED DIMENSIONS ARE IN INCHES TOLERANCES ARE: FRACTIONS + DECIMALS .XX+ .XXX+.XXX ANGLES + 1	CAD GENERATED DRAWING, DO NOT MANUALLY UPDATE	
	APPROVALS	DATE
	DRAWN FM	1/29/01
	CHECKED	
MATERIAL 16 GA CRS	RESP ENG	
FINISH POWDER COAT BLACK SEMI-GLOSS	MFG ENG	
DO NOT SCALE DRAWING	QUAL ENG	

BGW Systems, INC.
13130 Yukon Ave
Hawthorne, CA 90250

Cable Management
Steel Panel, Large Clips
1U

SIZE	DWG. NO.	REV.
A	CMLP-1	
SCALE	CAD FILE:	SHEET OF