THE INFORMATION CONTAINED IN THIS DRAWING IS THE SOLE PROPERTY OF BGW SYSTEMS, INC. ANY REPRODUCTION IN PART OR WHOLE WITHOUT THE WRITTEN PERMISSION OF BGW SYSTEMS, INC. IS PROHIBITED.

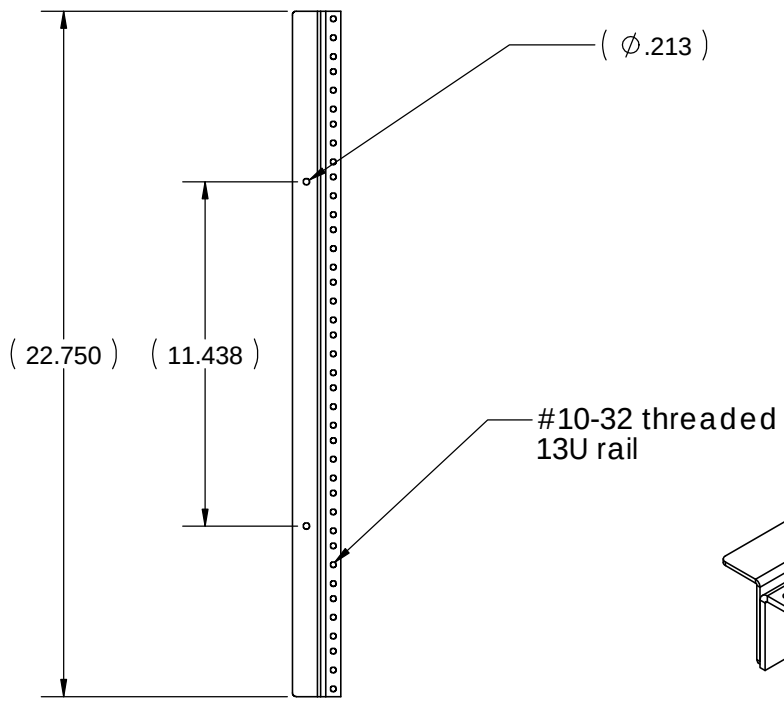

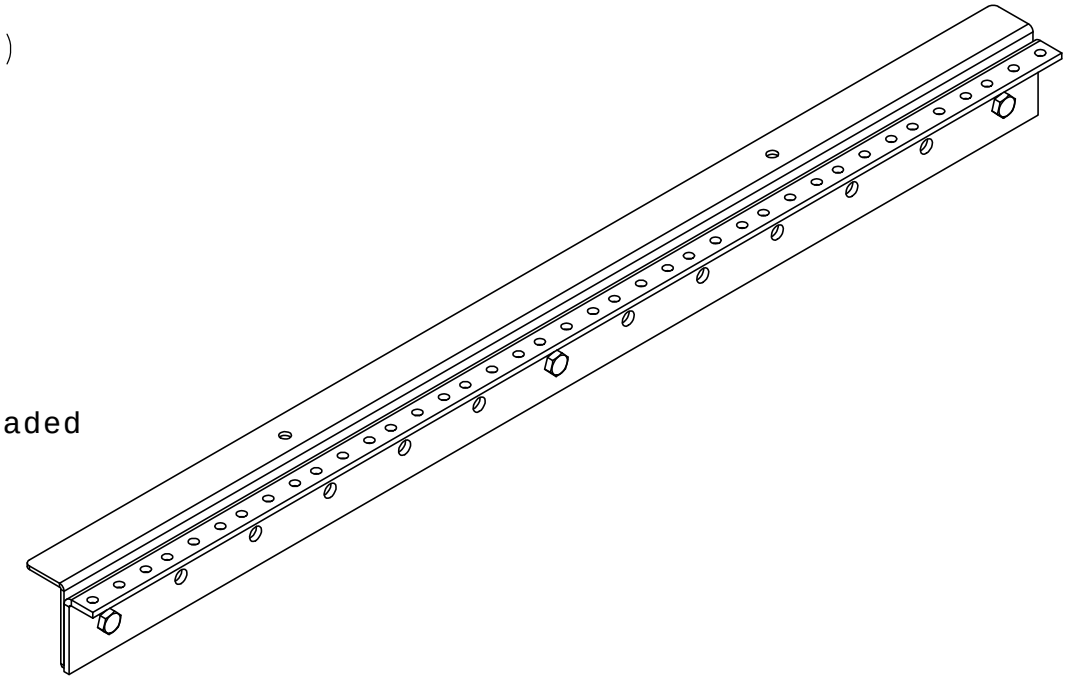

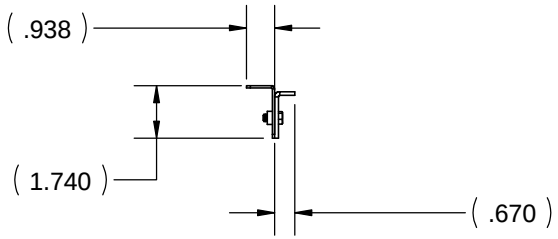

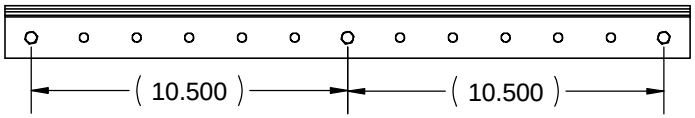

The RT-RRK is a kit that consists of a pair of brackets and 13U rack rail. One is mounted on each side of the top opening of the rack. Only one of the brackets is shown here.

UNLESS OTHERWISE SPECIFIED DIMENSIONS ARE IN INCHES TOLERANCES ARE: FRACTIONS + DECIMALS .XX+ .XXX+.XXX ANGLES + 1	CAD GENERATED DRAWING, DO NOT MANUALLY UPDATE		BGW Systems, INC. 13130 Yukon Ave Hawthorne, CA 90250
	APPROVALS	DATE	
	DRAWN FM	4/2/01	Rack Rail Kit For Top Of Rack 13U Racking Space
MATERIAL 14 GA CRS	CHECKED		
	RESP ENG		
FINISH TEXTURE POWDER COAT FLAT BLACK	MFG ENG		SIZE A DWG. NO. RT-RRK REV.
DO NOT SCALE DRAWING	QUAL ENG		SCALE CAD FILE: SHEET OF