THE INFORMATION CONTAINED IN THIS DRAWING IS THE SOLE PROPERTY OF BGW SYSTEMS, INC. ANY REPRODUCTION IN PART OR WHOLE WITHOUT THE WRITTEN PERMISSION OF BGW SYSTEMS, INC. IS PROHIBITED.

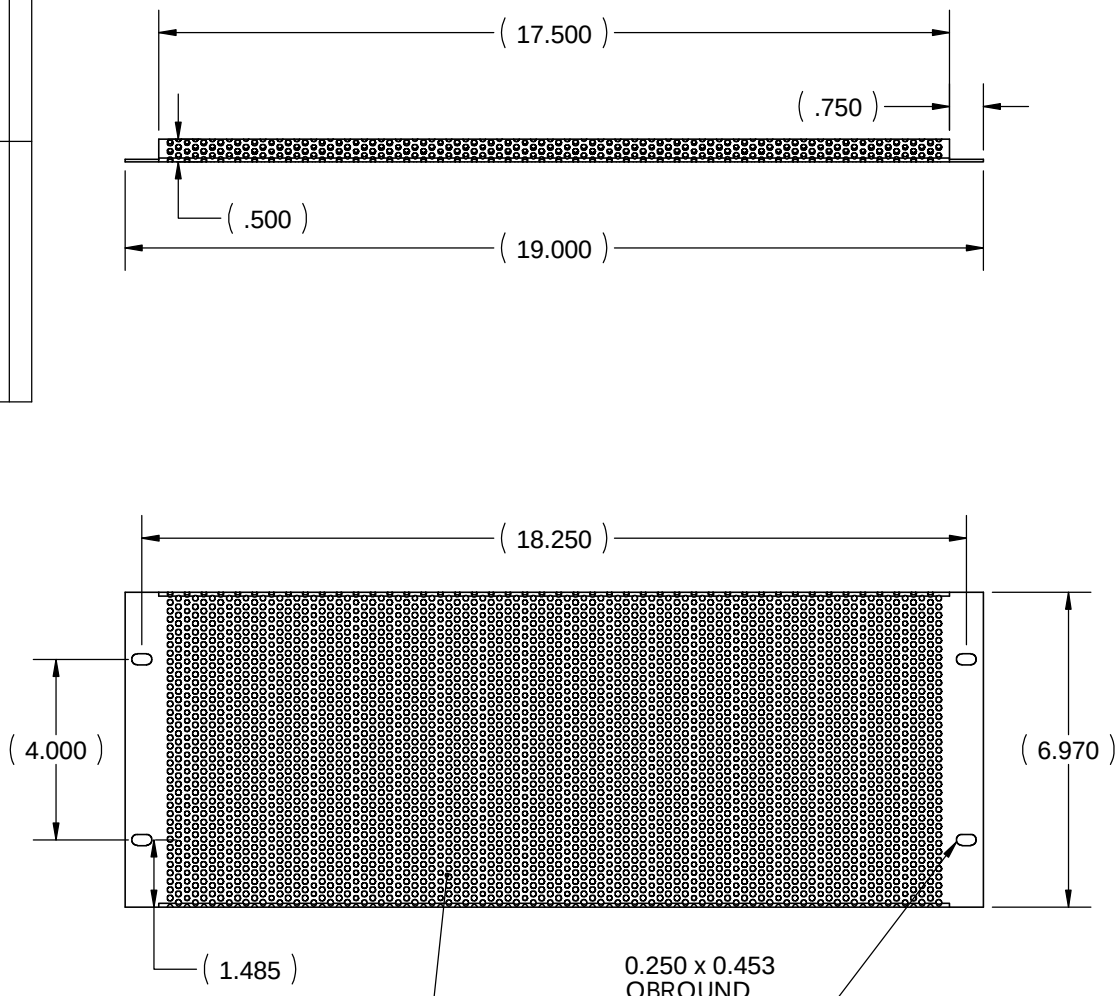

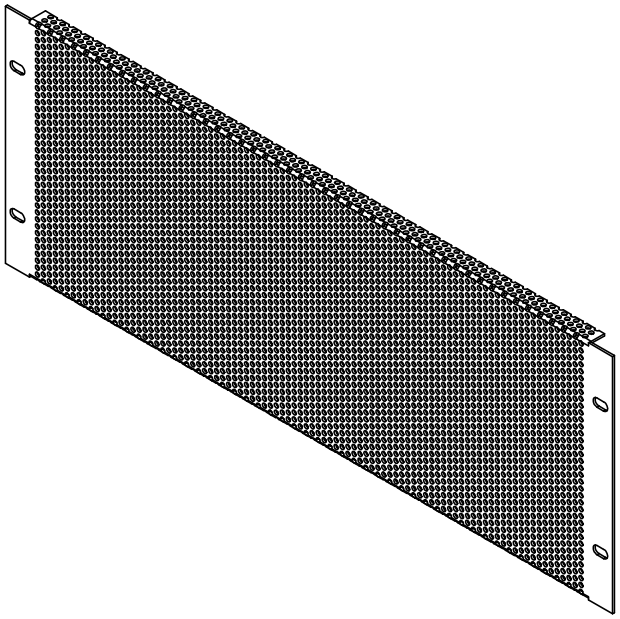

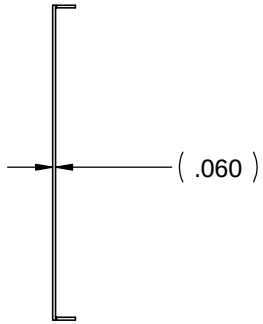

UNLESS OTHERWISE SPECIFIED DIMENSIONS ARE IN INCHES
TOLERANCES ARE:
FRACTIONS + DECIMALS .XX+ .XX .XXX+.XXX ANGLES + 1

MATERIAL 16 GA CRS Perforated

FINISH POWDER COAT BLACK SEMI-GLOSS

DO NOT SCALE DRAWING

CAD GENERATED DRAWING, DO NOT MANUALLY UPDATE

APPROVALS	DATE
DRAWN FM	12-7-00
CHECKED	
RESP ENG	
MFG ENG	
QUAL ENG	

BGW Systems, INC.
13130 Yukon Ave
Hawthorne, CA 90250

Perforated Steel
Vent Panel, 4U

SIZE A | DWG. NO. VP-4 | REV.

SCALE | CAD FILE: | SHEET | OF